THE NATIONAL INSTITUTE OF ENGINEERING

Mysuru – 570 008

Report

On

Linear Integrated Circuits Laboratory

Submitted By

VIKAS PATIL

4NI24EC175

IV Semester

Section C

Submitted to

Dr. Ashok K

Associate Professor

Dept of ECE

EXPERIMENT NO. 03

CHARACTERIZATION AND EXTRACTION OF VARIOUS PARAMETERS OF uA741 IC

AIM

To characterize and extract the parameters of the uA741 operational amplifier and compare them with datasheet values.

APPARATUS REQUIRED

- IC uA741
- Connecting wires
- Dual power supply
- Digital multimeter
- Function generator
- CRO / DSO

Measurement of inverting bias current IB1

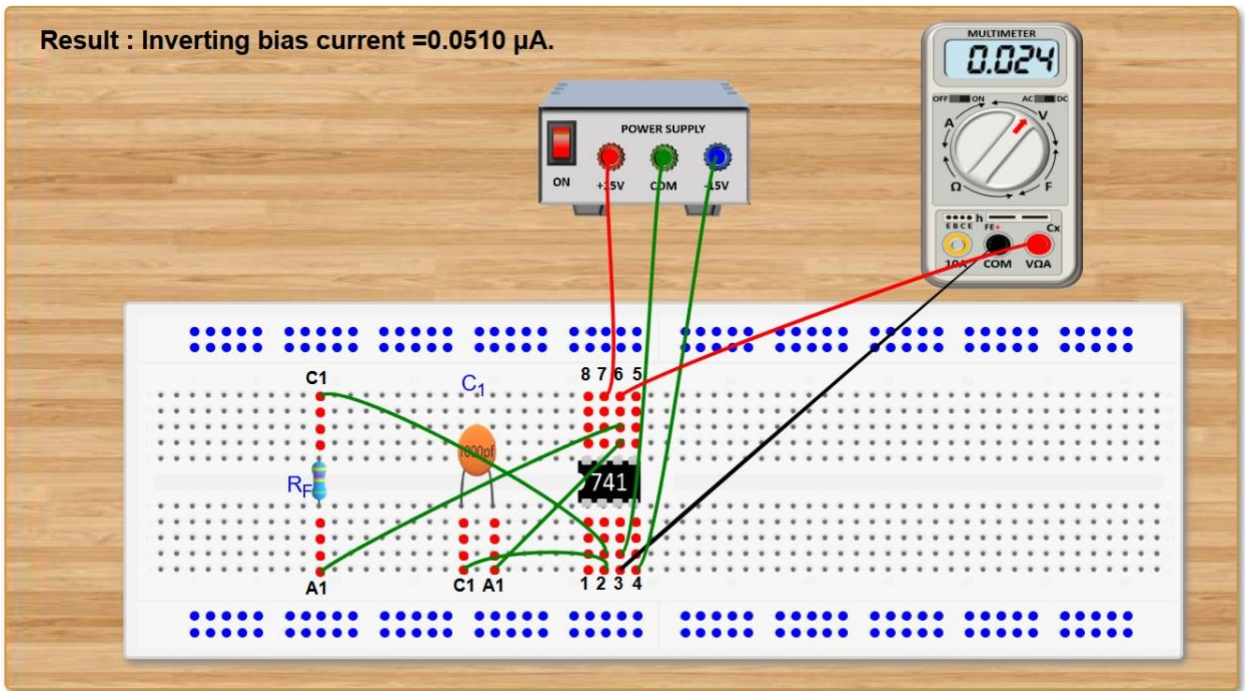

1. Click on the components button to place the component on the table.

2. Make connections as per the circuit diagram or connection table.

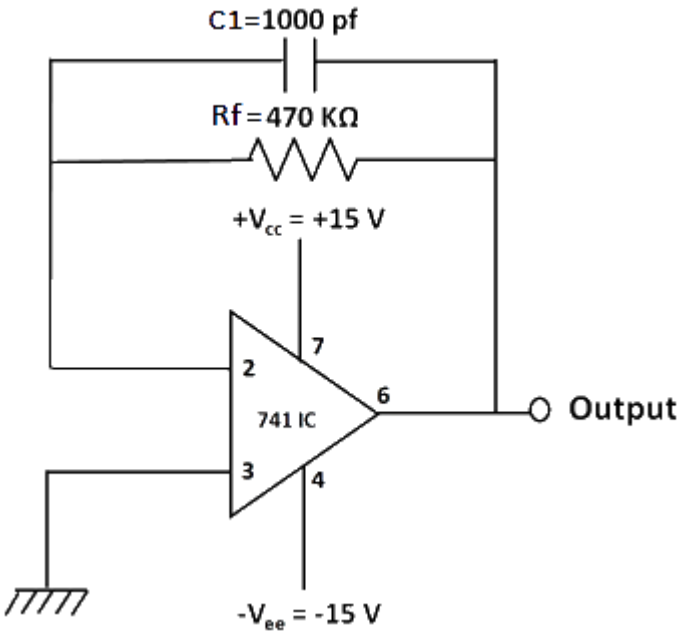

Fig 2: Circuit diagram to measure inverting bias current.

Table 1: Connection table to measure inverting bias current.

S. No.	Source	Target
1	IC741_ pin 07	Supply VCC
2	IC741_ pin 03	Supply GND
3	Multimeter _GND	Supply GND
4	IC741_ pin 04	Supply VEE
5	IC741 _ pin 02	Resistance (R_f) _ terminal C1
6	IC741_ pin 06	Resistance (R_f) _ terminal A1
7	IC741_ pin 02	Capacitance (C_1) _ terminal C1
8	IC741_ pin 06	Capacitance (C_1) _ terminal A1
9	Multimeter_VCC	IC741_ pin 06

3. Click on **'Check Connection'** button to check connections. If correct, Click on **'Show output voltage'** button to view output on DMM.
4. Calculate the inverting bias current using the formula:

$\mathbf{I_{B1} = V_o/R_f}$

V_o= 0.024V

And Rf=470k ohm

5. Click on **'Result'** button and enter the calculated value.
6. Click on **'Reset'** button and proceed in the same way to calculate the input bias current at non-inverting terminal.

b) Measurement of non-inverting bias current I_{B2}

1. Click on the components button to place the component on the table.

2. Make connections as per the circuit diagram or connection table.

Calculation of Inverting Bias Current (IB_1)

Given:

Vo = 0.024 V
Rf = 470 kΩ = 470000 Ω

Formula:

IB_1 = Vo / Rf

Substituting values:

$IB_1 = 0.024 / 470000$

$IB_1 = 5.106 \times 10^{-8}$ A

Converting to nanoampere:

$IB_1 = 51$ nA

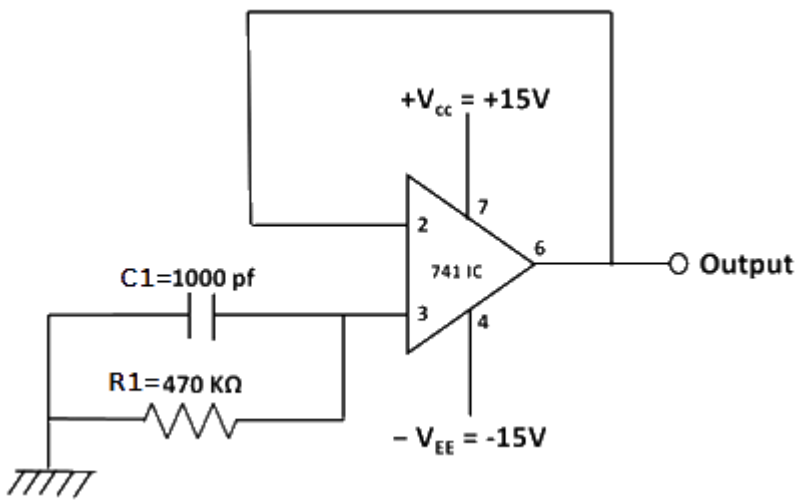

Fig 3: Circuit diagram to measure non-inverting bias current.

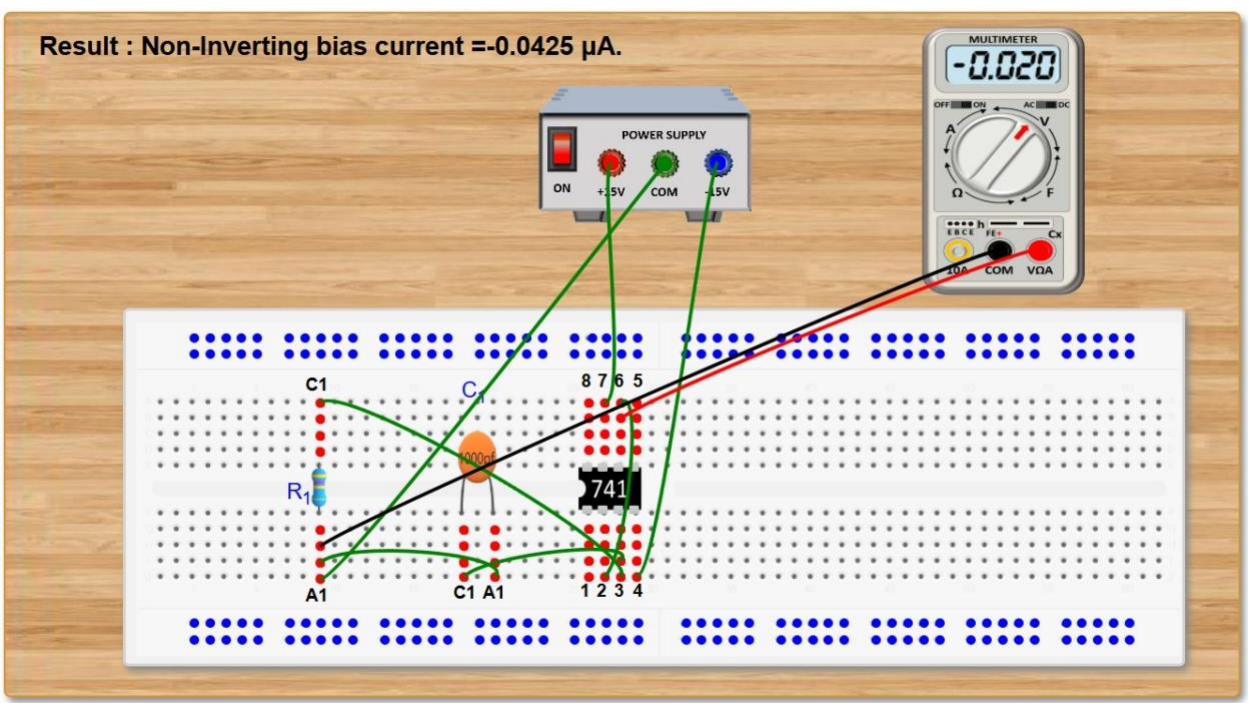

Table 2: Connection table to measure non-inverting bias current.

S. No.	Source	Target
1	IC741_ pin 07	Supply VCC
2	Multimeter_GND	Supply GND
3	IC741_ pin 06	IC741_ pin 02
4	IC741_ pin 04	Supply VEE
5	IC741_ pin 03	Resistance (R_1) _terminal C1
6	Supply GND	Resistance (R_1) _terminal A1
7	IC741_ pin 03	Capacitance (C_1) _terminal C1
8	Supply GND	Capacitance (C_1) _terminal A1
9	Multimeter_VCC	IC741_ pin 06

3. Click on **'Check Connection'** button to check connections. If correct, Click on **'Show output voltage'** button to view output on DMM.
4. Calculate the non-inverting bias current using the formula:

$$I_{B2} = V_o/R_1$$

5. Click on **'Result'** button and enter the calculated value.
6. The input bias current I_B hence, can be calculated using the formula:

$$I_B = (I_{B1} + I_{B2})/2$$

where, I_{B1} has to be calculated from previous part.

Calculation of Non-Inverting Bias Current (IB_2)

Given:

$Vo = -0.020$ V
$R_1 = 470$ kΩ = 470000 Ω

Formula:

$IB_2 = Vo / R_1$

Substituting values:

$IB_2 = -0.020 / 470000$

$IB_2 = -4.255 \times 10^{-8}$ A

Taking magnitude (bias current value):

$IB_2 = 4.255 \times 10^{-8}$ A

Converting to nanoampere:

$IB_2 = 42.6$ nA

B. Measurement of input offset current I_{io}

1. Click on the components button to place the component on the table.

2. Make connections as per the circuit diagram or connection table.

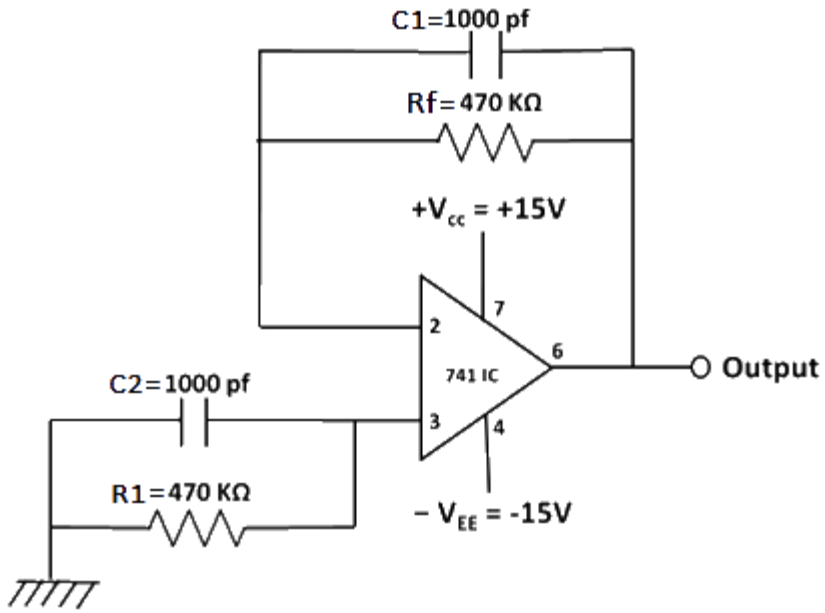

Fig 4: Circuit diagram to measure input offset current.

Table 3: Connection table to measure input offset current.

S. No.	Source	Target
1	IC741_ pin 07	Supply VCC
2	Multimeter_GND	Supply GND
3	IC741_ pin 04	Supply VEE
4	Resistance (R_f)_terminal A1	IC741_ pin 02
5	Resistance (R_f)_terminal C1	IC741_ pin 06
6	Capacitance (C_1) _terminal A1	IC741_ pin 02
7	Capacitance (C_1) _terminal C1	IC741_ pin 06
8	Resistance (R_1) _ terminal A1	IC741_ pin 03
9	Resistance (R_1) _ terminal C1	Supply GND
10	Capacitance (C_2) _terminal A1	IC741_ pin 03
11	Capacitance (C_2) _terminal C1	Supply GND
12	Multimeter_VCC	IC741_ pin 06

Characteristic parameters of Op-Amp : Measurement of input offset current

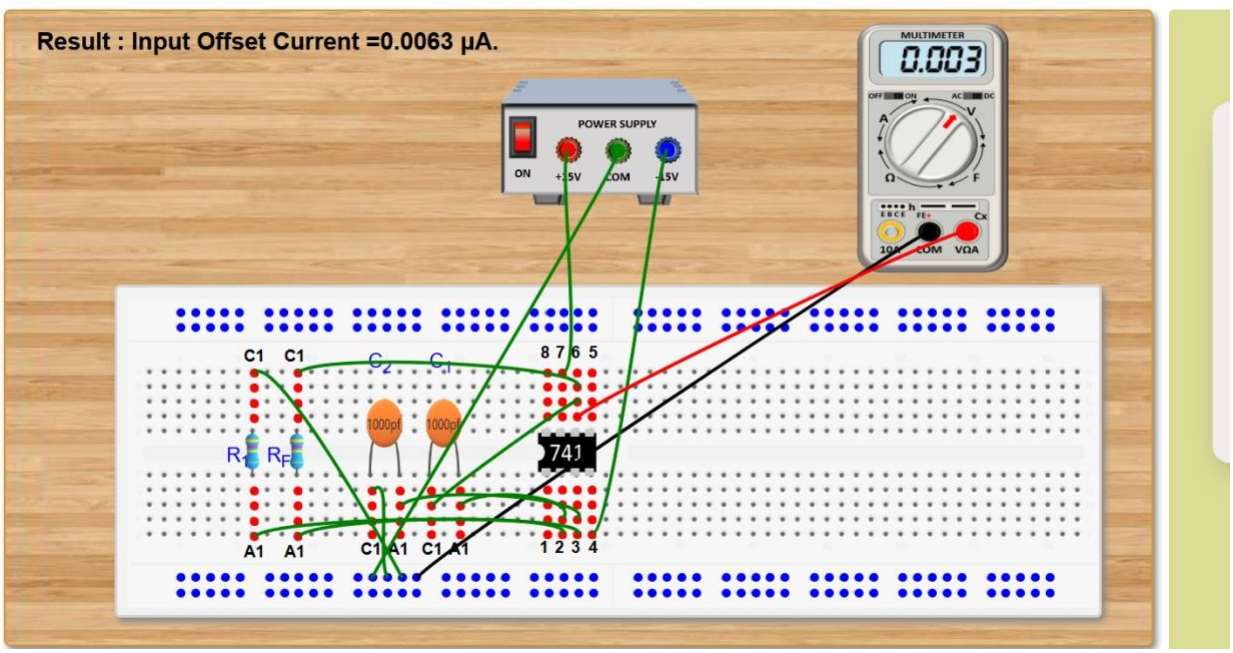

3. Click on **'Check Connection'** button to check connections. If correct, Click on **'Show output voltage'** button to view output on DMM.
4. Calculate the input offset current using the formula:

$I_{io} = V_o / R_f$

5. Click on **'Result'** button and enter the calculated value.

Calculation of Input Offset Current (Iio)

Given:

Vo = 0.003 V
Rf = 470 kΩ = 470000 Ω

Formula:

Iio = Vo / Rf

Substituting values:

Iio = 0.003 / 470000

Iio = 6.38×10^{-9} A

Converting to nanoampere:

Iio = 6.38 nA

Converting to microampere:

Iio = 0.00638 µA

C. Measurement of input offset voltage V_{io}

1. Click on the components button to place the component on the table.

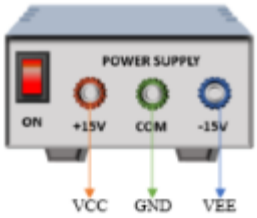

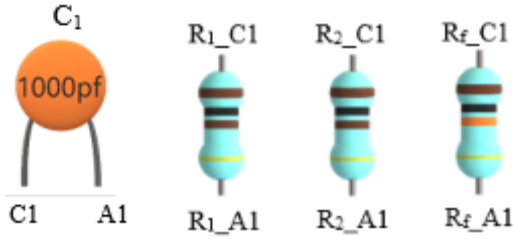

Fig 5: Components

2. Make connections as per the circuit diagram or connection table.

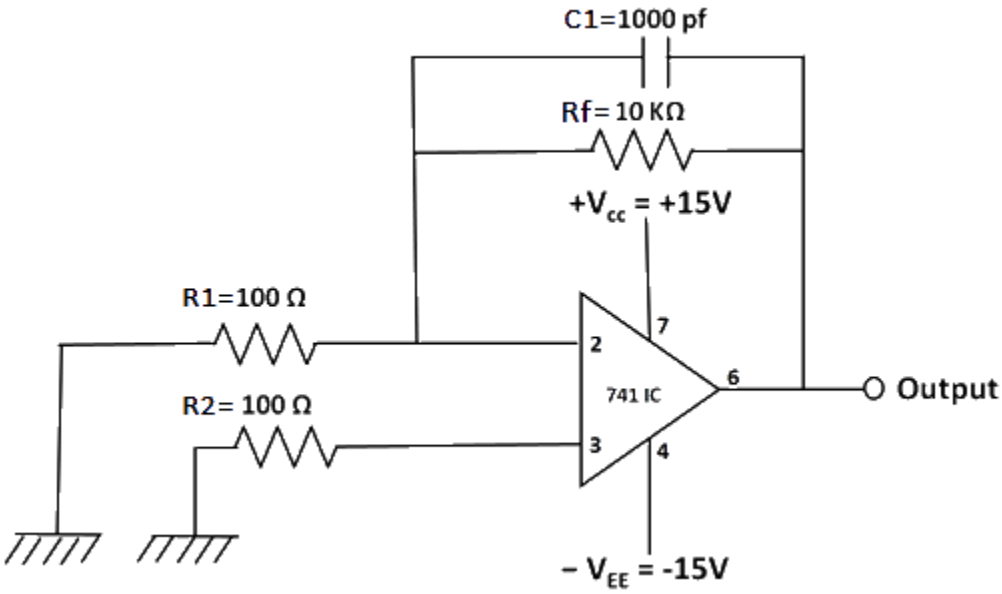

Fig 6: Circuit diagram to measure input offset voltage.

Table 4: Connection table to measure input offset voltage.

S. No.	Source	Target
1	IC741_ pin 07	Supply VCC
2	Multimeter_GND	Supply GND
3	IC741_ pin 04	Supply VEE
4	Resistance (R_f)_terminal A1	IC741_ pin 02
5	Resistance (R_f)_terminal C1	IC741_ pin 06
6	Capacitance (C_1) _terminal A1	IC741_ pin 02
7	Capacitance (C_1) _terminal C1	IC741_ pin 06
8	Resistance (R_2) _terminal A1	IC741_ pin 03
9	Resistance (R_2) _terminal C1	Supply GND
10	Resistance (R_1) _terminal A1	IC741_ pin 02
11	Resistance (R_1) _terminal C1	Supply GND
12	Multimeter_VCC	IC741_ pin 06

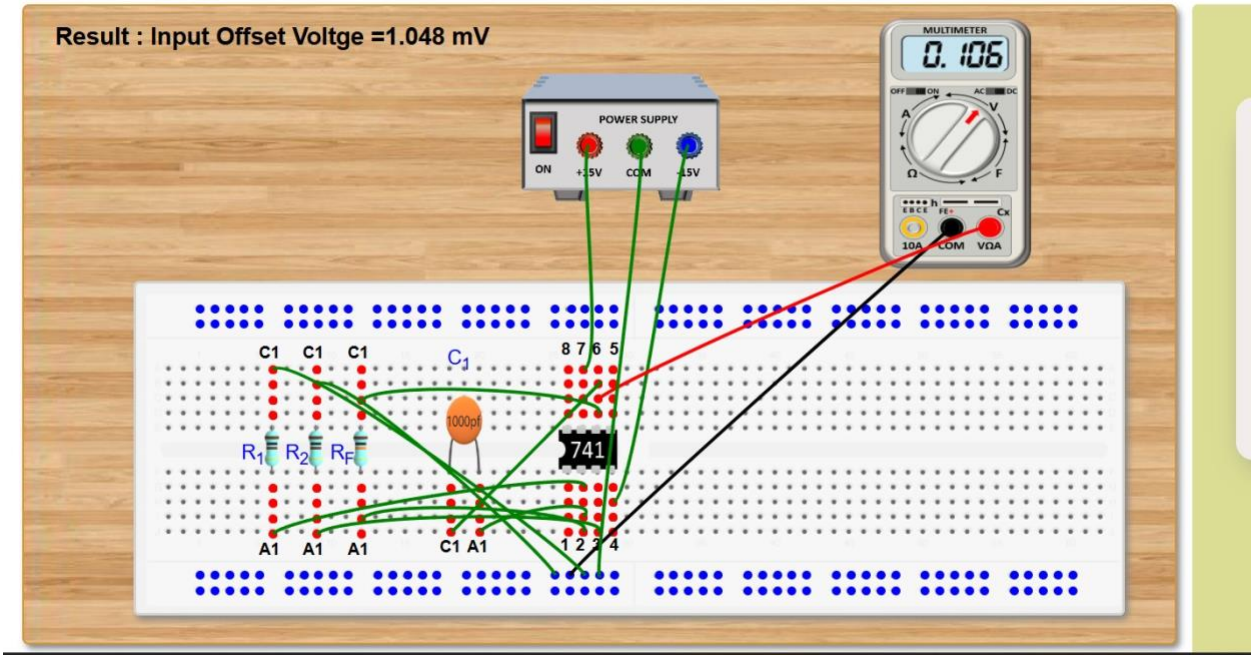

3. Click on **'Check Connection'** button to check connections. If correct, Click on **'Show output voltage'** button to view output (V_o) on DMM.
4. Calculate the input offset voltage, V_{io} using the formula:

$$V_{io} = (V_o - I_{io}R_f)/(1+R_f/R_i)$$

5. Click on **'Result'** button and enter the claculated value.

Calculation of Input Offset Voltage (Vio)

Given:

Vo = 0.106 V
Rf = 100 kΩ
Ri = 10 kΩ

Formula:

Vio = Vo / (1 + Rf / Ri)

Substituting values:

Vio = 0.106 / (1 + 100k / 10k)

Vio = 0.106 / (1 + 10)

Vio = 0.106 / 101

Vio = 0.001048 V

Converting to millivolts:

Vio = 1.048 mV

D. Measurement of slew rate S.R.

1. Click on the components button to place the component on the table.

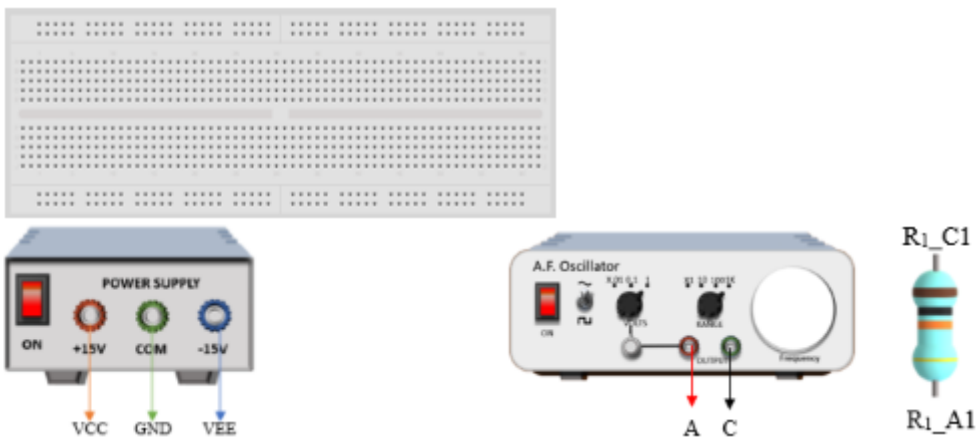

Fig 7: Components

2. Make connections as per the circuit diagram or connection table.

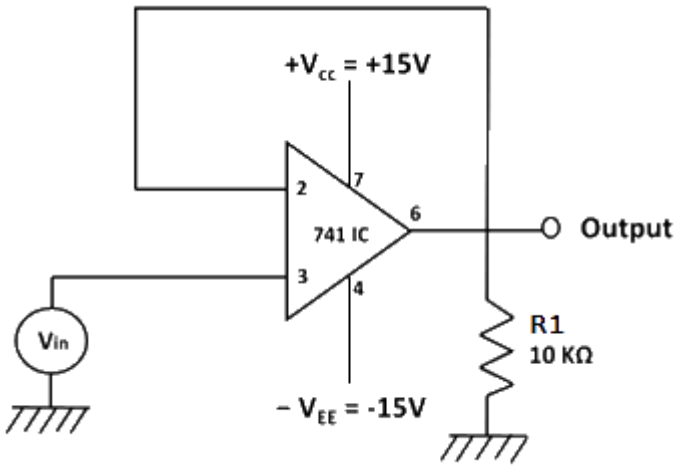

Fig 8: Circuit diagram to measure slew rate.

Table 5: Connection table to measure slew rate.

S. No	Source	Target
1	IC741_ pin 07	Supply VCC
2	IC741_ pin 04	Supply VEE
3	Generator_terminal C	Supply GND
4	Resistance (R_1) _terminal A1	IC741_ pin 06
5	Resistance (R_1) _terminal C1	Supply GND
6	IC741_ pin 06	IC741_ pin 02
7	Generator_ terminal A	IC741_ pin 03
8	CRO_ terminal C	IC741_ pin 06
9	Generator_terminal A	CRO_terminal A

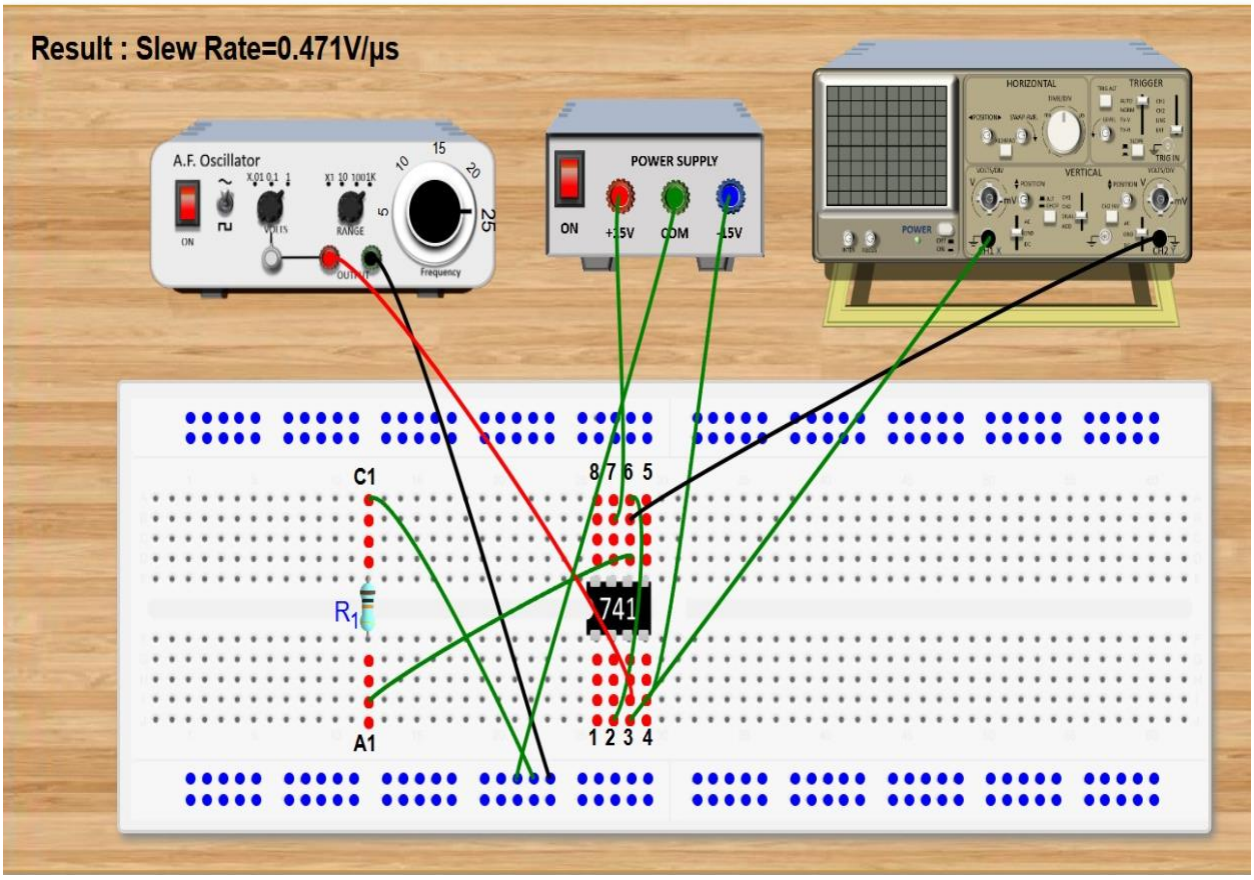

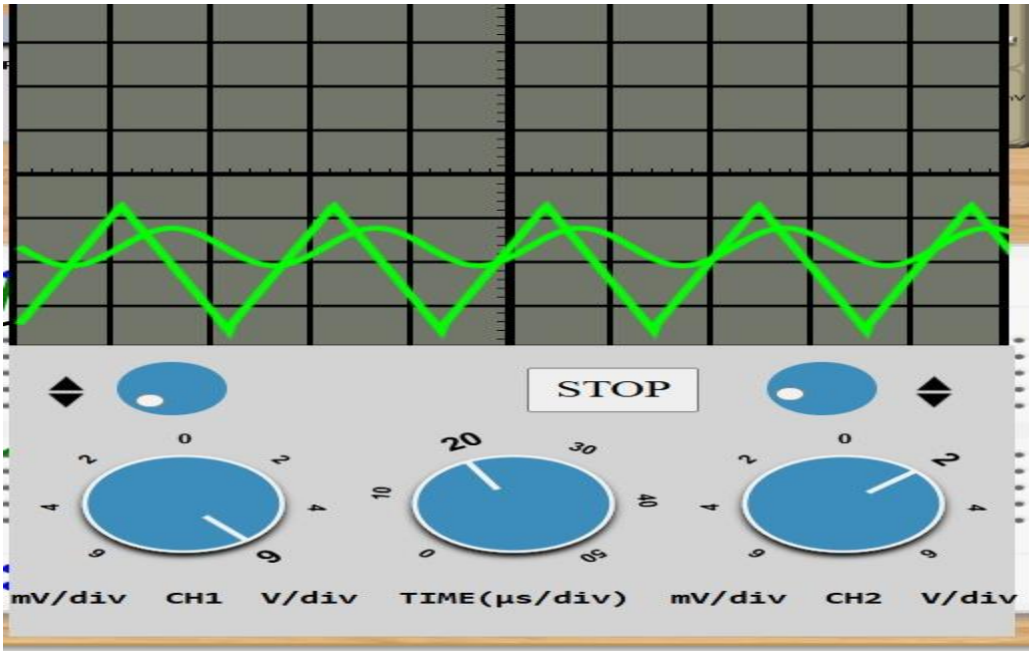

3. The **input signal*** has to be taken from the red terminal of A.F. Oscillator while the other terminal has to be grounded.
4. Also, feed the input signal to channel CH1 of the C.R.O and the output from Op-Amp IC must be fed to the channel CH2.
5. Click on **'Check Connection'** button to check connections. If correct, Click on **'Show output voltage'** button to view output.
6. Increase the frequency of input signal using the dial** on A.F. Oscillator until output wave becomes triangular. This is the required frequency $\mathbf{f_{max}}$ in KHz.
7. Calculate the slew rate using the formula:

$$\mathbf{S.R. = 2\pi f_{max} V_m / 10^6 \quad V/\mu s}$$

8. Click on **'Result'** button and enter the calculated value.

Calculation of Slew Rate (S.R.)

Given:

Vm = 3 V
fmax = 25 kHz = 25000 Hz

Formula:

$$S.R. = 2\pi \, f_{max} \, V_m / 10^6$$

Substituting values:

$$S.R. = 2\pi \times 25000 \times 3 / 10^6$$

S.R. = 471000 / 10^6

S.R. = 0.471 V/µs

RESULTS:

The various parameters of the uA741 operational amplifier were experimentally determined as follows:

- Inverting Bias Current, IB_1 = 51 nA
- Non-Inverting Bias Current, IB_2 = 42.6 nA
- Input Bias Current, IB = 46.8 nA
- Input Offset Current, Iio = 6.38 nA (0.00638 µA)
- Input Offset Voltage, Vio = 1.048 mV
- Slew Rate, S.R. = 0.471 V/µs

The experimentally obtained values are found to be close to the standard datasheet values of the uA741 operational amplifier.

INFERENCE

The parameters of the uA741 operational amplifier were successfully extracted using simulation. The obtained values of input bias current, input offset current, input offset voltage, and slew rate are close to the theoretical and datasheet specifications of the uA741 IC. Since the experiment was carried out in a simulated environment, minor practical variations such as temperature effects and component tolerances were not present, resulting in values that closely match ideal characteristics.

The simulation confirms the expected performance of the uA741 op-amp and validates its low slew rate nature, making it suitable mainly for low-frequency applications.